2018 IEEE International Conference on Manipulation, Manufacturing and Measurement on the Nanoscale (3M-NANO)
13-17 August, Hangzhou

A Parallel Impedance Measurement System for Electrical Impedance Tomography System with Multi-Microcontroller-Unit Architecture

1st Qilong Deng
School of Electronics and Information
Yangtze University
Jingzhou, China
201671342@yangtzeu.edu.cn

2nd Yang Su
ACXEL TECH LTD,
UK
yang.su@acxel.com

3rd Siyi Hu
CAS Key Laboratory of Bio-Medical Diagnostics
Suzhou Institute of Biomedical Engineering and Technology, Chinese Academy of Sciences,
Suzhou, China
husiyi@sibet.ac.cn

4th Xiaodong Xiong
School of Electronics and Information
Yangtze University
Jingzhou, China
xiongxd64@yangtzeu.edu.cn

5th Ruoyu Juan
School of Physics and Materials Science
Anhui University
Hefei, China
juanruoyu@163.com

6th Yan Zhang
School of Electronics and Information
Yangtze University
Jingzhou, China
yan.zhang@yangtzeu.edu.cn

7th Hanbin Ma*
CAS Key Laboratory of Bio-Medical Diagnostics
Suzhou Institute of Biomedical Engineering and Technology, Chinese Academy of Sciences,
Suzhou, China
mahb@sibet.ac.cn

***Abstract*—In this paper, we introduce the design, development and implementation of a parallel architecture impedance measurement system for electrical impedance tomography . The system achieves a balance between speed, cost and system size. A 16-electrodes parallel impedance measurement system is designed around a phantom tank. We use an AD9834-based direct digital synthesizer module and improved Howland voltage controlled current source circuit to generate a 50 kHz constant sinusoidal current with a peak-peak amplitude up to 1 mA. The root-mean-square (RMS) potential on all the adjacent pairs of electrodes is measured directly by the analog-to-digital converter of the STM32 microcontroller unit (MCU). In order to enhance the system operation speed, a multi-MCU architecture is proposed here. 16 MCUs are connected in parallel to measure the voltage of each electrode and execute the fast Fourier transform operation at the same time, which guarantees a data collection rate of over 30 frames/s. The 16 slave MCUs use the Inter-Integrated Circuit bus to communicate with the master MCU. The RMS data is then executed to obtain the impedance based on the acquired data.**

Keywords—Electrical Impedance Tomography (EIT), Multi-MCU, Parallel Architecture, Impedance Measurement

I. INTRODUCTION

Electrical impedance tomography (EIT) is a noninvasive imaging modality that reconstructs the internal impedance of the object by measuring the voltage from the boundary [1-2]. A typical EIT hardware consists of a current source, controlling units, switching electronics, and voltage measuring modules. An EIT system has at least 8 electrodes. A 10 kHz to 1 MHz sinusoidal current is usually engaged as the driving current and the voltage can be measured either serially or in parallel [3-4]. A series voltage readout module can reduce the complexity of hardware while the frame rate is limited. The frame rate can be improved greatly by applying parallel voltage measurement but the cost and complexity of hardware will be increased. A high frame rate or testing speed is significant for the application of daily monitoring using EIT, indicating parallel voltage readout modules are more preferred than serial ones. Electroencephalogram (EEG) system, which is a bulky and expensive machine, is usually engaged for parallel voltage recording in commercial systems [5-7]. Parallel voltage measurement system with portable size and low cost is still challenging. Although the capability of EIT in medical has been proven by many previous research, some of the major limitations include low resolution, vulnerability to system noise

[8]. As a result, improving the accuracy and anti-noise capability is another great challenge.

In this work, we designed the parallel impedance measurement system for EIT system using a highly integrated multi-processor architecture. The system achieves a balance between hardware cost and frame rate. The design of system is explained in detail and the impedance measurement result of an impedance network is compared with a commercial GAMRY INTERFACE 1010E impedance analyzer. Our system shows a good accuracy and high testing speed, which can serve as a great hardware for EIT system.

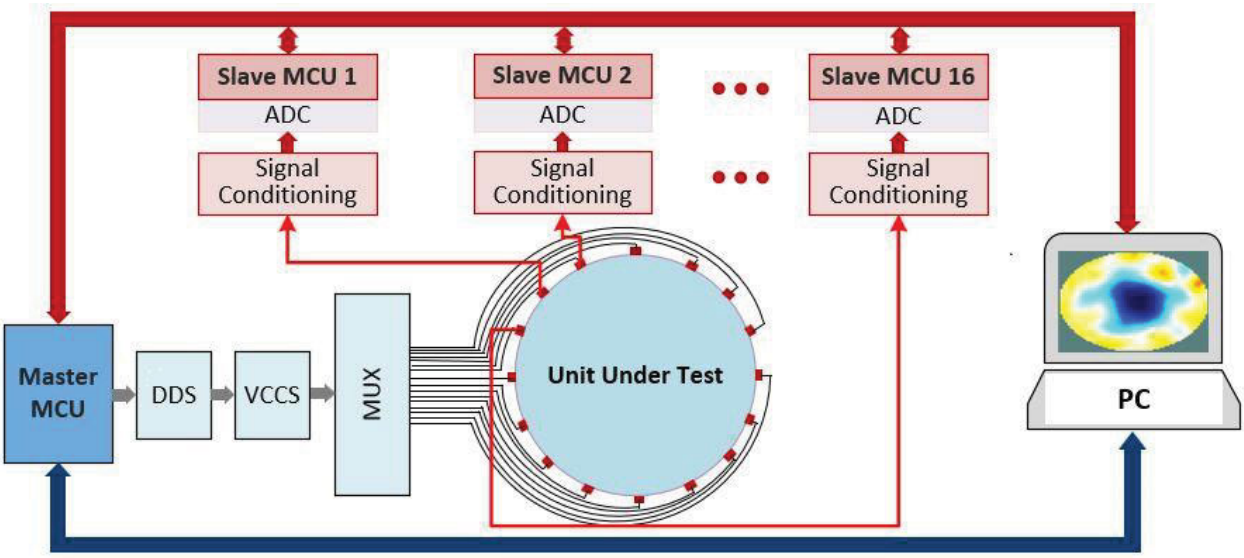

Fig. 1. Block diagram of our future EIT system.

II. Hardware Implementation

A. System Design

An EIT system usually consists of two parts, data acquisition unit and image reconstruction software. Traditional EIT systems use serial current injection and serial voltage measurement [9-11], which is often a disadvantage, as it has slow speed. We built the impedance measurement system for the EIT system using a parallel treatment design. Fig. 1 shows the basic block diagram of our parallel EIT system, which is comprised of a current generator, an array of electrodes, a multiplexer (MUX), signal conditioning circuits, ADC, microcontrollers, and a PC used for image reconstruction. Here, we have 16 microcontrollers as slaves and one as the master. The microcontroller STM32F446RE (STMicroelectronics, Italy and France) is based on ARM Cortex-M4 core with DSP and FPU at a frequency up to 180 MHz CPU. Besides, it offers a 12-bit ADC and a DAC, which is suitable for this application.

B. Excitation Signal

We used an AD9834 DDS integrated circuit (IC) and an OPA228-based improved Howland VCCS to generate the EIT excitation signal. The OPA228 is a high-precision, low-noise operational amplifiers. It is unity-gain stable and features high slew rate (2.3 V/us) and wide bandwidth (8 MHz), which is suitable for current source application. The AD9834 was configured to output 50 kHz sinusoidal waves. This signal was then input to the VCCS to output a constant 1mA peak-peak AC current. We used the adjacent drive method for current driven pattern [12-13]. It is the most common current driven pattern. Brown and Segar (1987) suggested a method where current was applied to a pair of electrodes and voltage was measured from other noncurrent pair of electrodes[14]. In this method, the current was applied through adjacent electrodes and the voltage was measured sequentially from all other adjacent electrode pairs without the pairs containing anyone of the current electrodes. This gave a total of N*(N-3) measurements. In our system, we measured the voltage at the same time instead of measuring in sequence. Fig. 2 shows our current injection and voltage measurement cycle. By using a MUX, current was injected through 16 electrode pairs in sequence. This parallel voltage measurement method leads to a faster data acquisition. The time consumed is about 1/16 of a

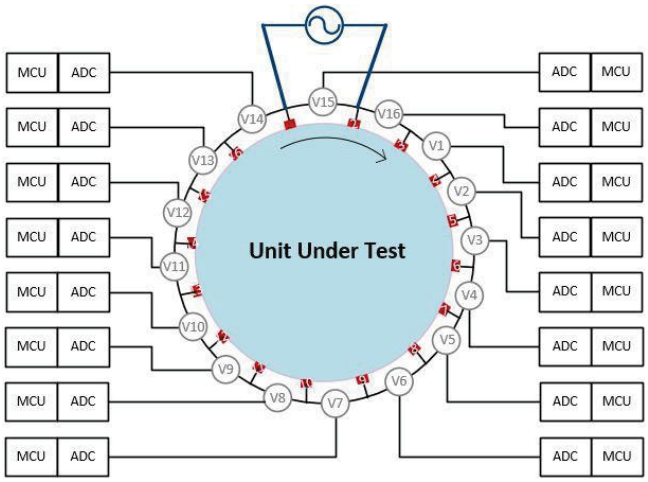

Fig. 2. Current injecting and voltage measuring setup.

serial method.

C. Multiplexing

Since we used 16 MCUs to control and acquire data, there was only one MUX needed for current injection. We connected one differential 16-to-1 channel multiplexer ADG726 complementary metal oxide semiconductor (CMOS) switches (Analog Devices Ltd., U.S.A) to the VCCS terminals to all 16 electrodes, forming the signal-projection pairs. All the 16 electrodes were connected to the independent pre-amplifier buffer terminals to measure voltage. In the four-pole scheme, the voltage measurement pairs are different from the current projecting pair. We measured 13 pairs of electrodes at the same time as the current was injected through one pair of electrodes. So we had to measure 16 times to get one frame data. The total time spent was less than 13 ms. since the MCU ran at 180 MHz. The system captured the voltage difference between electrodes instead of comparing it to the ground. We connected the VCCS's output to the differential input pins of ADG726 naming DA and DB. The values on the pins of DA and DB were passed down to ADG726's differential output pins Sax and Sabs (where x is from 1 to 16). The switch had a typical on resistance of 4 Ω, the resistance match between channels was 0.5 Ω.

D. Signal Conditioning

Since the current was injected through a pair of electrodes and the differential voltages were measured between different pairs of electrodes without the current injecting electrodes, we developed the signal conditioner circuit with an instrumentation amplifier AD623 as the first prime amplifier, which had a high common mode rejection ratio (CMRR) (minimum 105 dB at high gain). It was used for improving the signal to noise ratio (SNR). It had a differential input to convert the differential signal to a single-end signal. The second amplifier TLC2652 was configurated as an inverting amplifier, which had a fixed gain of about 20 dB. The total gain of the amplifiers were 40 dB.

E. Analog Sampling

Since there was electromagnetic interference (EMI) from power-line noise and resistor noise, etc. A low pass filter (LPF) and high pass filter (HPF) with a 50.0 kHz cutoff frequency was used to remove ambient EMI. We also used the microcontroller's 12bit DAC with an op-amp output buffer inside to generate a stable voltage reference of 3.3V direct current (DC) as a voltage level shifter. The input signal was then biased by 3.3V/2 (1.65V) and sampled by the microcontroller's ADC at 6 million samples per second (MSPS) with 12-bit resolution.

F. Data Acquisition

When the multiplexer had selected the appropriate electrode couple, we waited for 10 µs for the current signal to stabilize. Then the master MCU sent command to all slave MCUs to collect 1024 samples at the same time. The slave MCUs then took the FFT of that data to get the basic frequency's voltage amplitude. The front end performed a FFT at the rate of 0.8 ms per calculation. This led to a high performance and minimal noise set up. After that, the slave MCUs sent the data back to the master MCU via IIC bus. So the RMS of the samples was calculated to form a parallel measurements. The master microcontroller then controlled the next current injection and reconfigure the multiplexers accordingly. After the master MCU got all values for the current frame, it sent the RMS measurements to a computer over a USB cable. Table I shows our system's frame rate under the condition of EIT measurement. We can see clearly from the table that four-pole, 16-electrode may get 10 frames per second (FPS) which has a balance between accuracy and speed.

TABLE I. MEASUREMENTS AND FRAME

	Two-pole		Four-pole	
Number of Electrodes	8	16	8	16
Number of Measurements per Frame	28	120	40	208
Frame Rate Can Achieve (FPS)	10	8	5	3

III. SOFTWARE DESIGN

We used 2 microcontrollers in the impedance measurement experiments, the communication protocol within the MCUs occurred through an interrupt driven model. Communication via the IIC was limited to 400 kbps between the master MCU and slave MCUs. The master MCU used universal asynchronous receiver/transmitter (UART) to communicate with the PC at 921600 bps, as it is easy to achieve. Fig. 3 shows the sequence of the impedance measurement system's communication with the computer.

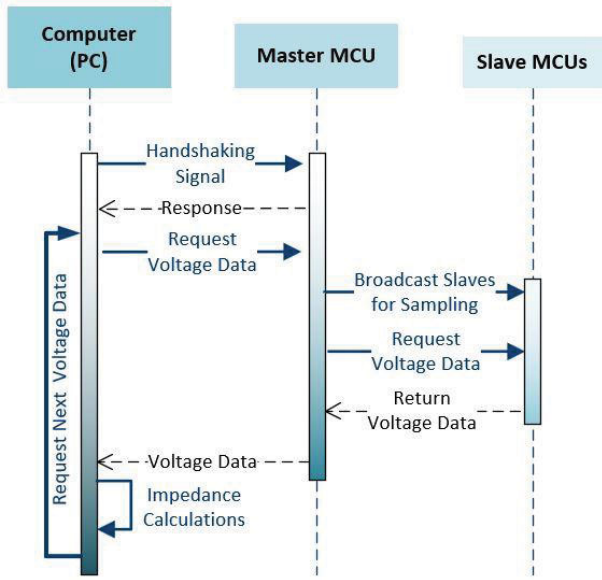

Fig. 3. Software program flowchart

A. Multi-MCU Comunication

As described in Fig. 3, our impedance measurement system has 16 microcontrollers connected together with the IIC bus. In

our system, we configured the IIC bus with a fast speed mode at 400 kb/s and a 7-bit address. when we used 16 slave MCUs, the 16 slave MCUs were programmed to have a different address of 2, 4, 6, 8, 10, …, 32，and address 0 is for the broadcast address. Benefit from this, the master could communicate with slaves easily. When the computer sent command to master, it activated one communication process.

IV. Measurement Results

A. Impedance Measurements

We performed a simple two-terminal impedance measurement and validated using a Gamry Interface 1010E

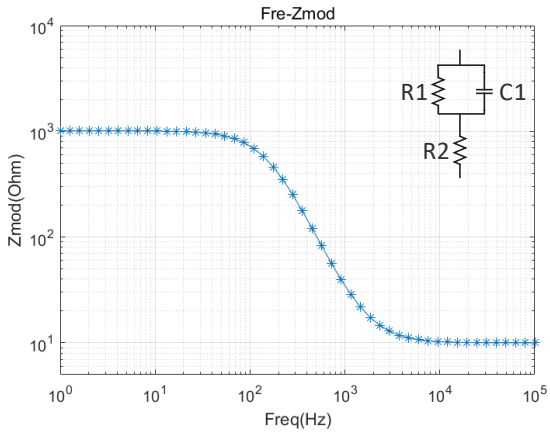

Fig. 4. Impedance calibration circuit and simulated results

Impedance Analyzer. KS Cole first theorize a biological impedance model [15]. Fig. 4 shows the impedance network that we used in this experiment. We set R1=1000 Ω, R2=10 Ω, C1=1uF. The complex impedance of this network is provided in (1), while impedance is provided in (4).

$$Z = R_2 + \frac{R_1 \times \frac{1}{j\omega C}}{R_1 + \frac{1}{j\omega C}} = R_2 + \frac{R_1}{1+\omega^2 R_1^2 C_1^2} - j\frac{\omega R_1 C_1}{1+\omega^2 R_1^2 C_1^2} \quad (1)$$

where $\omega=2\pi f$. Resistance and reactance are given by (2) and (3).

$$R=R_2 + \frac{R_1}{1+\omega^2 R_1^2 C_1^2} \quad (2)$$

$$X = -\frac{\omega R_1 C_1}{1+\omega^2 R_1^2 C_1^2} \quad (3)$$

$$|Z| = \sqrt{R^2 + X^2} \quad (4)$$

Fig. 5 shows the impedance results as the frequency changes which are calculated in MATLAB. From the simulation results, we know that when the AC frequency is very low, we think there is only resistance R1 and R2 play a major role and the total impedance is about R1+R2=1010Ω. When the frequency is very high, the capacitance C1 plays a major role and the impedance is about R2=10 Ω which can be inferred from (1). If one pair electrodes are used to apply the AC current (I) to the electrode system and we measure the resulting voltage (V) across the electrodes, the impedance (Z) is simply given by the AC equivalent of Ohm's law (5).

$$Z=\frac{V}{I} \quad (5)$$

The impedance between the electrodes was recorded on GAMRY INTERFACE 1010E at the frequencies from 100Hz to 50 kHz. We set the impedance measurement system generating a frequency between 2kHz to 15kHz and the current amplitude was 500uA. Values of impedance at different frequencies are calculated and the results are given in Fig 5. The results show that the impedance of the network reduces as frequency increasing. And our system has an average accuracy up to 10%. But the accuracy is cut down a lot when frequency is above 10 kHz. When frequency is above 10kHz, we know the impedance is about 10Ω either from the simulation result or GAMRY INTERFACE 1010E's measurement result. We can get a weak voltage about 5mV on the electrodes if we used a 500uA amplitude current, it is hard to detect such weak voltage when we just use a 12bit ADC without external voltage reference even it has been amplified but this may bring noise. We will use a high-resolution ADC, such as 16bit or more in our future work. We had measured another groups of data using different resistance and capacitance values. At last we get the approximately measurement accuracy range. Since we will use this impedance measurement system in EIT system for measuring biological impedance (the biological impedance will be about 100 Ω to 1000 Ω), the accuracy is able to meet the requirements.

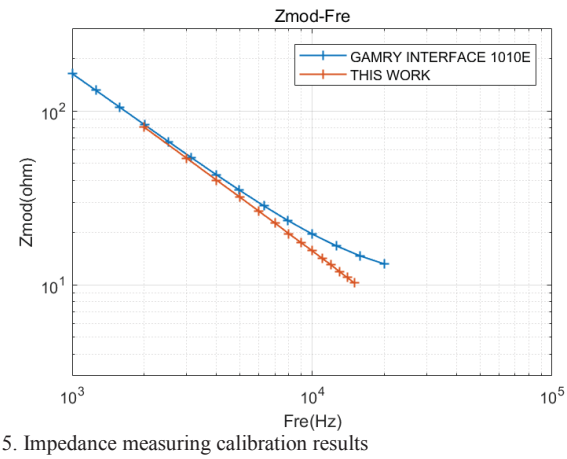

Fig. 5. Impedance measuring calibration results

Fig. 6 shows the 10% measurement accuracy range of this work. It's obvious that the system's range of measurement goes down as the frequency increasing. For example, it has a measurement range of about 30Ω~960Ω at 10kHz with 10% precision. The system can't be used to measure high impedance since the amplifiers have limit input and output

voltage, bandwidth, etc. On the other hand, small impedance can't be

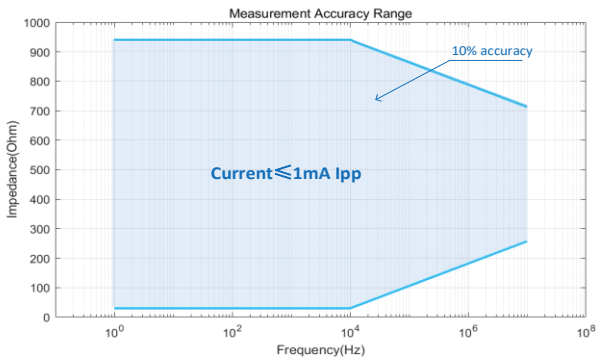

Fig. 6. Measurement accuracy range.

measured due to the limit precision and resolution of the ADC.

V. Conclusions

This paper presents the multi-processor parallel impedance measurement system for EIT systems. One master MCU and 16 slave MCU were integrated to achieve efficient controlling and parallel measurement of voltage. The system was compared to a commercial impedance analyzer and the measuring error was less than 10%. The system achieves a balance between speed, cost and size. We are currently working on the image reconstruction and further improve the accuracy and frame rate by using independent faster ADC sampling, higher bandwidth communication interface, etc.

Acknowledgment

THIS WORK WAS SUPPORTED BY HUNDRED-TALENT PROGRAM OF CAS.

References

[1] J.G. Webster, Electrical Impedance Tomography. Adam Hilger Series of Biomedical Engineering, Adam Hilger, New York, USA, 1990.

[2] Brown, B.H. and Seagar, A.D., 1987. The Sheffield data collection system. Clinical Physics and Physiological Measurement, 8(4A), p.91.

[3] Wi, H., Sohal, H., McEwan, A.L., Woo, E.J. and Oh, T.I., 2014. Multi-frequency electrical impedance tomography system with automatic self-calibration for long-term monitoring. IEEE transactions on biomedical circuits and systems, 8(1), pp.119-128.

[4] Xuetao, S., Fusheng, Y., Feng, F., Ruigang, L. and Xiuzhen, D., 2006, January. High precision multifrequency electrical impedance tomography system and preliminary imaging results on saline tank. In Engineering in Medicine and Biology Society, 2005. IEEE-EMBS 2005. 27th Annual International Conference of the (pp. 1492-1495). IEEE.

[5] Avery, J., Dowrick, T., Faulkner, M., Goren, N. and Holder, D., 2017. A versatile and reproducible multi-frequency electrical impedance tomography system. Sensors, 17(2), p.280.

[6] Aristovich, K.Y., Packham, B.C., Koo, H., dos Santos, G.S., McEvoy, A. and Holder, D.S., 2016. Imaging fast electrical activity in the brain with electrical impedance tomography. NeuroImage, 124, pp.204-213.

[7] Romsauerova, A., McEwan, A., Horesh, L., Yerworth, R., Bayford, R.H. and Holder, D.S., 2006. Multi-frequency electrical impedance tomography (EIT) of the adult human head: initial findings in brain tumours, arteriovenous malformations and chronic stroke, development of an analysis method and calibration. Physiological measurement, 27(5), p.S147.

[8] Chitturi, V., Farrukh, N., Thiruchelvam, V. and Fei, T.K., 2014. A Low Cost Electrical Impedance Tomography (EIT) for Pulmonary Disease Modelling and Diagnosis. In The Second International Conference on Technological Advances in Electrical, Electronics and Computer Engineering (TAEECE2014) (pp. 83-89). The Society of Digital Information and Wireless Communication.

[9] A.E.Hoetink, T.J.C.Faes, J.T. Marcus, H.J.J. Kerkkamp, R.M. Heethaar, "Imaging of thoracic blood volume changes during the heart cycle with electrical impedance using a linear spot-electrode array", IEEE Trans. Med. Imaging 21 (6) (2002) 653.

[10] Hong H, Demosthenous A, Triantis I, Langlois P and Bayford R 2010 IEEE Biomedical Circuits and Systems Conference (BioCAS) pp 230–3

[11] Ross A S, Saulnier G J, Newell J C and Isaacson D 2003 Current source design for electrical impedance tomography Physiol. Meas. 24 509–16

[12] Hong S, Yan W, Shu Z and Chaoshi R 2007 Integrated data collection in electrical impedance tomography 13th Int.

[13] D. S. Holder, Electrical Impedance Tomography, Methods, History and Applications, Institute of Physics, Series in Medical Physics and Biomedical Engineering, Ch. 10, London, UK, 2005.

[14] Brown B. H and Seagar A. D, "The Sheffield data collection system", Clin. Phys. Physiol. Meas., 1987,Vol. 8, Suppl. A, 91-97.

[15] Cole K S, Cole R H. Dispersion and Absorption in Dielectrics.The Journal of Chemical Physics 9, 341(1941).